Student Name: _____

Student ID# _____

	Check which tutorial for pick-up
T01 Mondays	
T03 Tuesdays	
T02 Wednesdays	

CHEMICAL ENGINEERING 2O04
Fluid Mechanics -Midterm

DAY CLASS
Duration 150 minutes (6:00pm – 8:30pm) **D.R. Latulippe**
McMaster University Term Test **Friday, March 2nd, 2018**

The test includes **6 questions in 8 pages**; ensure your copy of the test is complete.

SPECIAL INSTRUCTIONS

1. The class **textbook (any version of the Pritchard's <u>Fox & McDonald</u>) and any notes** are allowed.
2. McMaster calculator only (and case with unit conversions) is permitted.
3. Only tests written in **PEN** will be considered if re-marking is requested (addition errors excepted).
4. Table A.6 'Thermodynamic properties of common gases at STP' from the 9th edition textbook is given on page 8.
5. Marks for each problem are given (**Total of 54 marks)**. Use this as a time-management guide; for example, a question worth only 1 marks should take less than 3 minutes:

$$1mark\left(\frac{150\ minutes}{54\ marks}\right) = 2.77\ minutes$$

QUESTION 1 - 10 MARKS
Answer the following short questions in the space provided:

a.	_____ is the measure of a fluid's ability to resist deforming under an applied shear stress. **(1 mark)**	
b.	The continuity equation is based on the conservation of _____. **(1 mark)**	
c.	'The thin layer of fluid next to a solid surface moves at the same velocity as the solid' is called the _____ condition. **(1 mark)**	
d.	"A coefficient of determination near zero (i.e R^2 ~ 0) does NOT always mean that y and x are not related." Create a brief sketch which illustrates this concept. **(1 mark)**	

e.	Write the differential continuity equation in vector notation form. **(2 marks)**	
f.	The Reynolds number represents the ratio of what two forces? **(2 marks)**	
g.	The Bernoulli equation is also referred to as the mechanical energy balance. Show how the terms in the Bernoulli equation with units of m^2/s^2 represent units of specific energy. **(2 marks)**	

QUESTION 2 – 6 MARKS

As shown in the figure, an inverted U-tube manometer contains Meriam red oil and water (both at temperature of 20 ºC). Given that the pressure differential between the centerlines of pipes B and A (i.e. $P_B - P_A$) is 2.1 kPa, determine the value of the differential reading h (in m).

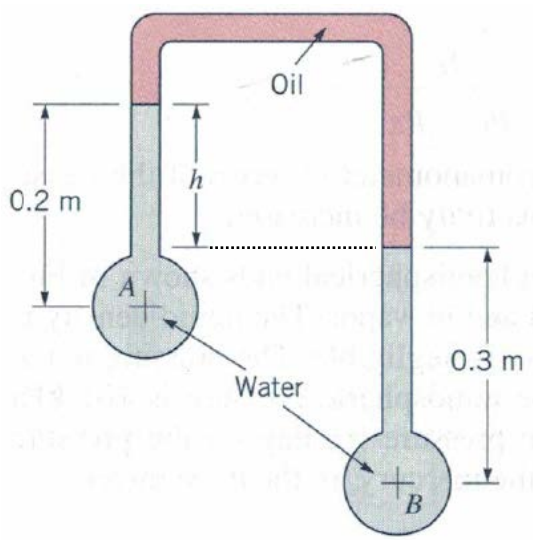

QUESTION 3 - 8 MARKS

A Type I offshore life jacket (i.e. personal flotation device) is the type worn by commercial fishermen – it is designed for extended survival in rough, open seawater. Consider such a life jacket that uses an impermeable foam material with a density of 32 kg/m^3 – the other parts of the life jacket (straps, fasteners, etc) weigh 0.6 kg and are of negligible volume to the design.

a) Draw a free body force diagram for the life jacket.
(3 marks)

b) Determine the minimum volume of foam material (in L) that is needed for the life jacket in order to provide a minimum 98 N *net upward force* when it is fully submerged in seawater (as required by US Coast Guard regulations).
(5 marks)

QUESTION 4 - 9 MARKS

Carbon dioxide gas flows into the horizontal cylindrical tank (as shown in figure) at point A at a velocity of 10 m/s; nitrogen gas flows into the same tank at point B at a velocity of 6 m/s. Both gases enter at a gauge pressure of 300 kPa and a temperature of 250 ºC. Determine the average velocity of the gas mixture (in m/s) with total density = 1.55 kg/m^3 that leaves the tank at a *steady rate* at point C.

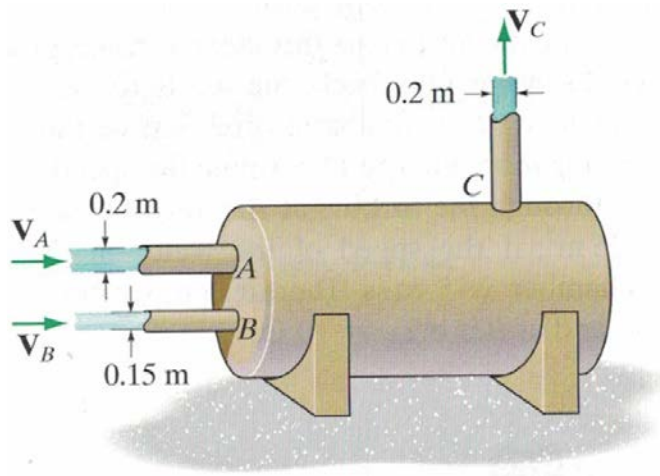

NOTE – you can assume ideal gas properties for both incoming gas streams.

QUESTION 5 - 10 MARKS

An incompressible liquid enters a vertical cylindrical tank (diameter = 60 cm) at point A at a rate of 0.0028 m^3/s. As shown in the accompanying figure, the same liquid exits the tank through a 3 cm diameter orifice (point B) located at the very bottom; the velocity of the liquid leaving via the orifice is given by the formula $\sqrt{2gh}$ where h is the height of the liquid in the reservoir (m) and g is the standard gravitational constant.

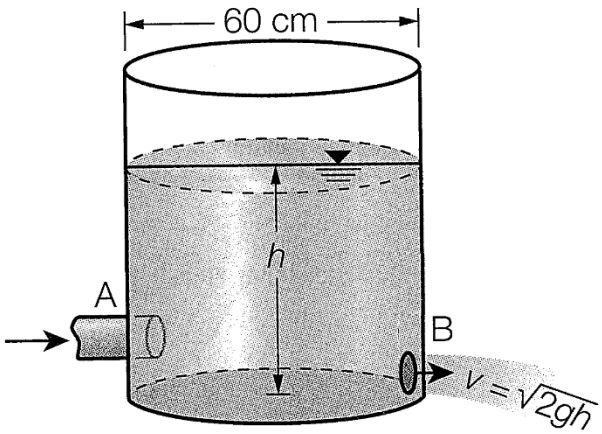

a) Determine the value of h (in m), the height of the liquid in the reservoir, when the system is at steady-state.
(4 marks)

b) For the special case where the cylindrical tank is initially empty, starting from the general mass balance equation, derive an expression for the rate at which the height of liquid in the reservoir is changing with respect to time (dh/dt) in terms of the parameters you have been given.
(4 marks)

c) State the appropriate limits of integration that are needed to solve the equation from part b). *NOTE you do NOT need to solve the differential equation.*
(2 marks)

QUESTION 6 - 11 MARKS

An incompressible liquid (specific gravity = 0.7) is being transported along a horizontal, galvanized iron cylindrical pipe (actual inside diameter = 7.5 cm). At a volumetric flow rate of 4.5 L/s, two pressure gauges that are located 100 m apart along the length of the pipe indicate a pressure differential of 12.1 kPa.

a) Write the simplified form of the Bernoulli equation that describes the liquid transport between the two pressure gauges – note that there are no 'minor losses' between the two pressure gauges.
(3 marks)

b) Assuming that the flow is fully turbulent, solve for the corresponding friction factor.
(4 marks)

c) Determine the viscosity (in Pa·s) of the liquid.
(3 marks)

d) Given that the fluid temperature is 20 ^{o}C, exactly what fluid do you propose is being transported through the pipe?
(1 mark)

Table A.6

Thermodynamic Properties of Common Gases at STP[a]

Gas	Chemical Symbol	Molecular Mass, M_m	R^b $\left(\frac{J}{kg \cdot K}\right)$	c_p $\left(\frac{J}{kg \cdot K}\right)$	c_v $\left(\frac{J}{kg \cdot K}\right)$	$k = \frac{c_p}{c_v}$ (–)	R^b $\left(\frac{ft \cdot lbf}{lbm \cdot °R}\right)$	c_p $\left(\frac{Btu}{lbm \cdot °R}\right)$	c_v $\left(\frac{Btu}{lbm \cdot °R}\right)$
Air	—	28.98	286.9	1004	717.4	1.40	53.33	0.2399	0.1713
Carbon dioxide	CO_2	44.01	188.9	840.4	651.4	1.29	35.11	0.2007	0.1556
Carbon monoxide	CO	28.01	296.8	1039	742.1	1.40	55.17	0.2481	0.1772
Helium	He	4.003	2077	5225	3147	1.66	386.1	1.248	0.7517
Hydrogen	H_2	2.016	4124	14,180	10,060	1.41	766.5	3.388	2.402
Methane	CH_4	16.04	518.3	2190	1672	1.31	96.32	0.5231	0.3993
Nitrogen	N_2	28.01	296.8	1039	742.0	1.40	55.16	0.2481	0.1772
Oxygen	O_2	32.00	259.8	909.4	649.6	1.40	48.29	0.2172	0.1551
Steam[c]	H_2O	18.02	461.4	~2000	~1540	~1.30	85.78	~0.478	~0.368

Source: Data from References [7, 16, 17].

[a]STP = standard temperature and pressure, $T = 15°C = 59°F$ and $p = 101.325$ kPa (abs) = 14.696 psia.

[b]$R \equiv R_u/M_m$; $R_u = 8314.3$ J/(kgmol · K) = 1545.3 ft · lbf/(lbmol · °R); 1 Btu = 778.2 ft · lbf.

[c]Water vapor behaves as an ideal gas when superheated by 55°C (100°F) or more.

THE END